NAMA PEMILIK PROYEK : **PT PERTAMINA EP**

NAMA PROYEK : **JASA PEMBANGUNAN FASILITAS PRODUKSI STASIUN PENGUMPUL (SP) TANJUNG MIRING BARAT & KARANGAN TIMUR**

LOKASI : **SP TANJUNG MIRING BARAT & KARANG TIMUR - FIELD LIMAU**

NO. KONTRAK : **SA02035383B**

REV.	TGL.	DESKRIPSI	DISIAPKAN	DIPERIKSA	DISETUJUI	DIPERIKSA	DISETUJUI
A	23-12-25	Issued For Review	FA	AS	RTN		
			PT. PROSYMPAC OIL & GAS			PT. PERTAMINA EP	

TABEL REVISI

Rev.	Tanggal	Deskripsi

COMMENT RESPONSE SHEET

No.	Page	Company's Comment	Contractor's Response	Remarks

PCG	JASA PEMBANGUNAN FASILITAS PRODUKSI STASIUN PENGUMPUL (SP) TANJUNG MIRING BARAT & KARANGAN TIMUR	Doc. No: TMBP-SP001-PS-DST-D101
		PAGE 1 of 1
		Date: 23-Des-2025

DATASHEET OF FIRE PROTECTION

1	**1. General Information**																
2	Service	:	Firewater Hydrant								Item No.	:	H-001 - 010				
3	Location	:	Outdoor								Type	:	Pillar				
4	Color	:	Red Ral 3000								Approval	:	UL Listed/FM Approved				
5	**2. Operating Conditions**																
6	Fluid Handled		Fresh Water														
7	Temperature		Max	:	36.7	°C	Min	:	19.4	°C	Normal	:	Ambient				
8	Pressure		Max	:	9	barg	Min	:	3.5	barg	Operating	:	7				
9	Fire Water Header		Size	:	9	Inch	■	Aboveground			☐	Underground					
10	**3. Design Features**																
11	Type	:	Wet Barrel														
12	Capacity	:	2 x 250 gpm at 100 psig														
13	Connector	Inlet Connection From Fire Water Header	Flange	Size	:	6	Inch			Rating	:	150# ANSI					
14			Inlet Valve	■	Separate	☐	Built In			☐	None						
15				Type	:	Gate Valve											
16		Hose Connector	Coupling	Size	:	2.5	Inch			Qty	:	2					
17				Type	:	Instantaneous - Male											
18				☐	JIS	■	BS			☐	ANSI	☐	DIN	☐	NH		
19		Pumper Connection	Coupling	No	Size	4	Inch			Qty	:	1					
20				Type	:	Instantaneous - Male											
21				☐	JIS	■	BS			☐	ANSI	☐	DIN	☐	NH		
22			Valve	■	Separate	☐	Built In			☐	None						
23	**4. Accessories**																
24																	
25	- Flange Bolts & Nuts																
26	- Flange Gasket																
27	- Cap & Chain																
28	- Hydrant Wrench																
29	**5. Material**																
30	Hydrant Body		Carbon Steel (A 106 Gr. B)														
31	Flange Connector	Flange	Carbon Steel														
32		Inlet Valve	Body :	Carbon Steel		Stem :	(Note 1)										
33			Disk :	(Note 1)		Seat :	(Note 1)										
34	Hose Connector	Coupling	Bronze - Brass														
35		Valve	Body :	Bronze or Brass		Stem :	(Note 2)										
36			Disk :	Bronze or Brass		Seat :	Bronze or Brass										
37	Pumper Connection	Coupling	Bronze														
38		Valve	Body :	-		Stem :	-										
39			Disk :	-		Seat :	-										
40	Cap		Brass														
41	Chain		Stainless Steel														
42	**6. Test & Inspection**					**7. Sparepart**											
43	Dimension & Workmanship		Yes			- Flange Gasket											
44	Hydrostatt Pressure (psig)		Body : not less than 200 psi														
45			V seat : -														
46	**8. Painting**					**9. Unit Weight**											
47	Body	Aboveground :	Red Ral 3000			(note 2)		kg									
48	**11. Remarks**																
49	VTA : Vendor to Advice																
50	Note :																
51	1. Flange shall use ANSI Standard																
52	2. As per manufacture standard																
53	3. The picture is ilustration only, the detail item is as per manufacturer standard																
54																	
55																	
56																	
57																	

(Note 3)

PCG	JASA PEMBANGUNAN FASILITAS PRODUKSI STASIUN PENGUMPUL (SP) TANJUNG MIRING BARAT & KARANGAN TIMUR	Doc. No: TMBP-SP001-PS-DST-D101
		PAGE 2 of 2
		Date: 23-Des-2025

DATASHEET OF FIRE PROTECTION

1	**1. General Information**													
2	Service	:	Fire Hose Cabinet/Hose Box				Item No.	:	N/A					
3	Location	:	Outdoor				Type	:	Self Standing Type					
4	Model No	:	(Note 4)				Brand Name	:	(Note 4)					
5	Qty	:	10				Approval	:	UL Listed/FM Approved					
6	**2. Operating Conditions**													
7	Temperature	Max	:	36.7	°C	Min	:	19.4	°C	Normal	:	Ambient	°C	
8	**3. Design Features**													
9	Type	Door	Hinged Right - Single Hinged											
10		Support	Leg											
11		Ventilation	Yes											
12	Dimension (inch)		Wide	:	VTA	Length	:	VTA	Height	:	VTA			
13	Shelves or Rack		Item Stored				Specification						Qty	
14			Coupling Spanner (Note 1)										1 set	
15			Spray/Water Nozle				- Pistol Grip Spray Nozzle, 2.5", NST Thread						1 ea	
16							- Adjustable to Straight/fog/shut position							
17			Fire Hose (Note 2)				2.5 inch x 23 m (75 ft)						2 ea	
18	**4. Accessories**													
19	- Name Plat													
20	**5. Materials**													
21	Cabinet		Carbon Steel (Note 5)											
22	Shelves or Rack		Carbon Steel (Note 5)											
23	Legs		Carbon Steel (Note 5)											
24	Hinges		Stainless Steel											
25	Knob		Stainless Steel											
26	**6. Test & Inspection**						**7. Sparepart**							
27	Dimension & Workmanship		Yes				N/A							
28	**8. Painting**						**9. Unit Weight**							
29	Cabinet	Internal	Red Ral 3000				Empty	:	(Note 4)	kg				
30		External	Red Ral 3000				Total	:	(Note 4)	kg				
31	Letters		"HYDRANT"											
32	**11. Remarks**													
33	VTA : Vendor to Advice													
34	Note :													
35	1. Hydrant valve lock and coupling blind lock													
36	2. Complete with 2-1/2 Inches pre-couples male and female BID Coupling Material : Allumunium Alloy													
37	3. Flange shall use ANSI Standard 4. As per manufacture Standard													
38														
39														
40														
41														

PCG	JASA PEMBANGUNAN FASILITAS PRODUKSI STASIUN PENGUMPUL (SP) TANJUNG MIRING BARAT & KARANGAN TIMUR	Doc. No: TMBP-SP001-PS-DST-D101
		PAGE 3 of 3
		Date: 23-Des-2025

DATASHEET OF FIRE PROTECTION

1	**1. General Information**												
2	Service	:	Firewater Monitor					Item No.			FM-001 ~ 002		
3	Location	:	Outdoor					Model Name		:	(Note 4)		
4	Qty	:	2					Approval		:	UL Listed/FM Approved		
5	**2. Operating Conditions**												
6	Fluid Handled		Fresh Water										
7	Temperature		Max	:	36.7	°C	Min	:	19.4	°C	Normal	:	Ambient
8	Pressure		Max	:	9	barg	Min	:	5	barg	Operating	:	7
9	Fire Water Header		Size	:	9	Inch	■ Aboveground				☐ Underground		
10	**3. Fire Monitor Design Features**												
11	Operating Type		:	Lever									
12	Capacity		:	500 gpm at 100 psig									
13	Movement		:	Hortzontally	:	360	deg	Vertically	:	45 to 60	deg		
14	Nozzle	Water Nozzle		Capacity 500 gpm									
15				Straight/fog steam									
16	Connector	Inlet Connector	Flange	Size	:	2.5	Inch						
17			Valve	Size	:	2.5	Inch	Gate Valve - Separate					
18	**4. Accessories**												
19													
20	- Flange Bolts & Nuts												
21	- Flange Gasket												
22													
23													
24	**5. Material**												
25	Fire Monitor	Body		Bronze/Brass									
26		Nozzle Pipe		(Note 2)									
27		Flange		(Note 2)									
28		Gasket		(Note 2)									
29		Bolt/Nut		(Note 2)									
30	**6. Test & Inspection**			**7. Sparepart**									
31	Dimension & Workmanship	Yes		- Flange Gasket									
32	**8. Painting**			**9. Unit Weight**									
33	Body	Aboveground :	Red Ral 3000	(note 2)		kg							
34	**11. Remarks**												
35	VTA : Vendor to Advice												
36	Note :												
37	1. Flange shall use ANSI Standard												
38	2. As per manufacture standard 3. The picture is ilustration only, the detail item is as per manufacturer standard												
39													
40													
41													
42													
43													
44													

PGG	JASA PEMBANGUNAN FASILITAS PRODUKSI STASIUN PENGUMPUL (SP) TANJUNG MIRING BARAT & KARANGAN TIMUR	Doc. No: TMBP-SP001-PS-DST-D101
		PAGE 4 of 4
		Date: 23-Des-2025

DATASHEET FOR SPRAY NOZZLE

1	Type	:	Full cone
2	Protection Method	:	Directional Spray
3	Fluid Handled	:	Firewater
4	Operating Pressure	:	20 - 60 psig (1.4 - 4.1 barg)
5	Operating Temperature	:	Ambient
6	Applied Code / Standard	:	NFPA 15

2. Technical Requirment

7	K Factor (gpm + √ psig)	:	1.8	Orifice Diameter (in)	:	0.25
8	Operating Pressure (psig)	:	40 (2.76 barg)	Nozzle Material	:	VTA
9	Angle (deg) / Spray Pattern	:	110	End Connection Size	:	1/2" NPT
10	Quantity	:	42	Approval	:	UL and/or FM
11	Fixed Angle (deg)	:	(Note 1)	Others	:	(Note 2)

3. Test and Inspection

12	Dimension & Workmanship	:	Yes
13	Hydrostatic Pressure	:	VTA

4. Painting				5. Unit Weight	
14	Body	:	VTA	VTA	lb
15	Letters	:	VTA		

Front View

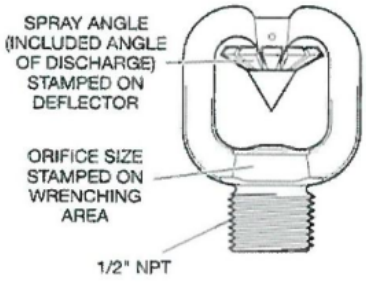

Side View

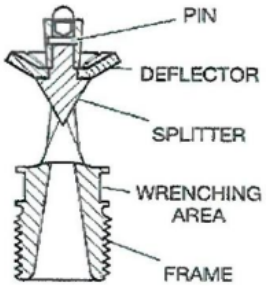

Remarks

VTA : Vendor to Advice

Note :
1. Refer to P&ID Fire Protection System (Fire Water), Doc. No. TMBP - SP0001 - PS - PID - D101
2. Nozzle shall (I) be one piece without Parts (II) be clog resistant (III) be 1/2" NPT male connection type

PGG	JASA PEMBANGUNAN FASILITAS PRODUKSI STASIUN PENGUMPUL (SP) TANJUNG MIRING BARAT & KARANGAN TIMUR	Doc. No: TMBP-SP001-PS-DST-D101
		PAGE 5 of 5
		Date: 23-Des-2025

DATASHEET FOR SPRAY NOZZLE

1	Type	:	Full cone
2	Protection Method	:	Directional Spray
3	Fluid Handled	:	Firewater
4	Operating Pressure	:	20 - 60 psig (1.4 - 4.1 barg)
5	Operating Temperature	:	Ambient
6	Applied Code / Standard	:	NFPA 15

2. Technical Requirment

7	K Factor (gpm + √ psig)	:	3	Orifice Diameter (In)	:	0.25
8	Operating Pressure (psig)	:	40 (2.76 barg)	Nozzle Material	:	VTA
9	Angle (deg) / Spray Pattern	:	110	End Connection Size	:	1/2" NPT
10	Quantity	:	42	Approval	:	UL and/or FM
11	Fixed Angle (deg)	:	(Note 1)	Others	:	(Note 2)

3. Test and Inspection

12	Dimension & Workmanship	:	Yes
13	Hydrostatic Pressure	:	VTA

4. Painting				5. Unit Weight	
14	Body	:	VTA	VTA	lb
15	Letters	:	VTA		

Front View

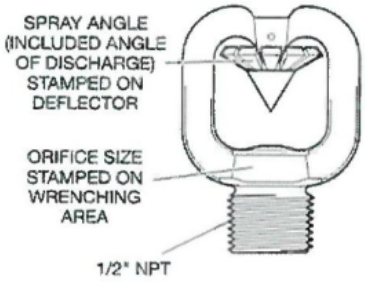

Side View

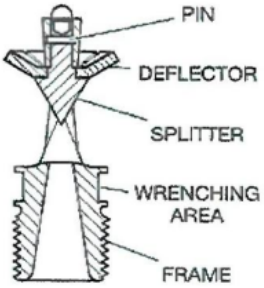

Remarks

VTA : Vendor to Advice

Note :
1. Refer to P&ID Fire Protection System (Fire Water), Doc. No. TMBP - SP0001 - PS - PID - D101
2. Nozzle shall (I) be one piece without Parts (II) be clog resistant (III) be 1/2" NPT male connection type

PGG	JASA PEMBANGUNAN FASILITAS PRODUKSI STASIUN PENGUMPUL (SP) TANJUNG MIRING BARAT & KARANGAN TIMUR	Doc. No: TMBP-SP001-PS-DST-D101
		PAGE 6 of 6
		Date: 23-Des-2025

DATASHEET FOR DELUGE VALVE

1. Process Condition							
1	Fluid Handled	:	Firewater				
2	Operating Pressure	:	100 psig				
3	Operating Temperature	:	Ambient				
4	Quantity	:	3				
2. Design Features							
5	Valve Type	:	Diaphragm - Electric Actuation	Flange Rating & Facing	:	VTA	
6	Valve Size	:	3"	Seat Material	:	VTA	
7	Body Material	:	VTA	Spring Material	:	VTA	
8	Trim Material	:	VTA	Diaphragm Material	:	VTA	
9	Flange Size	:	3"				
3. Valve Operation							
10	Operating Type	:	Electrically Triggered Activated	Control Type	:	Automatic and/or manual	
11	Operating Time	:	Opening Max : 4 sec or VTA				
12		:	Closing Max : 8 sec or VTA				
13	Pressure Drop Across Deluge Valve Assembly	:	Max 10 psi or VTA				
4. Accessories							
14	Pressure Gauge	:	Yes, Required	Pressure Transmiter	:	N/A	
15	Tubing	:	Yes (as accessories/as required)	Fitting	:	N/A	
16	Automatic Drain Valves	:	Yes	Pressure Alarm Switch	:	Yes	
17	Solenoid Valve		Type	2-Way			
18			Power Supply / Connection	VTA		1/2" NPT	
19			Manual Mechanical Reset	VTA			
20			Protection	VTA			
5. Others							
21	Painting Color	:	Red (Ral 3000)	Manufacture	:	VTA (as per AMP/PML)	
22	Hydro Test	:	Yes	Model No.	:	VTA	
23	Approval	:	UL Listed or FM Approved				

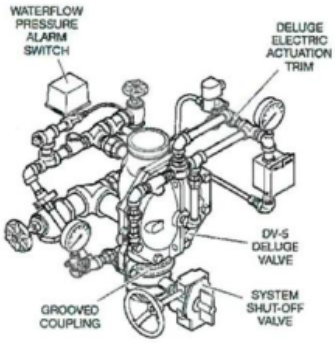

Remarks

VTA : Vendor to Advice

PGG	JASA PEMBANGUNAN FASILITAS PRODUKSI STASIUN PENGUMPUL (SP) TANJUNG MIRING BARAT & KARANGAN TIMUR	Doc. No: TMBP-SP001-PS-DST-D101
		PAGE 7 of 7
		Date: 23-Des-2025

DATASHEET FOR DELUGE VALVE

1. Process Condition

1	Fluid Handled	:	Firewater
2	Operating Pressure	:	100 psig
3	Operating Temperature	:	Ambient
4	Quantity	:	1

2. Design Features

5	Valve Type	:	Diaphragm - Electric Actuation	Flange Rating & Facing	:	VTA
6	Valve Size	:	2"	Seat Material	:	VTA
7	Body Material	:	VTA	Spring Material	:	VTA
8	Trim Material	:	VTA	Diaphragm Material	:	VTA
9	Flange Size	:	2"			

3. Valve Operation

10	Operating Type	:	Electrically Triggered Activated			Control Type		:	Automatic and/or manual	
11	Operating Time	:	Opening	Max	:	4 sec	or	VTA		
12		:	Closing	Max	:	8 sec	or	VTA		
13	Pressure Drop Across Deluge Valve Assembly	:	Max 10 psi	or	VTA					

4. Accessories

14	Pressure Gauge	:	Yes, Required	Pressure Transmitter	:	N/A
15	Tubing	:	Yes (as accessories/as required)	Fitting	:	N/A
16	Automatic Drain Valves	:	Yes	Pressure Alarm Switch	:	Yes
17	Solenoid Valve	Type		2-Way		
18		Power Supply	Connection	VTA		1/2" NPT
19		Manual Mechanical Reset		VTA		
20		Protection		VTA		

5. Others

21	Painting Color	:	Red (Ral 3000)	Manufacture	:	VTA (as per AMP/PML)
22	Hydro Test	:	Yes	Model No.	:	VTA
23	Approval	:	UL Listed or FM Approved			

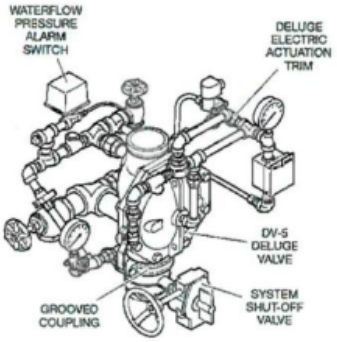

Remarks

VTA : Vendor to Advice

PGG	JASA PEMBANGUNAN FASILITAS PRODUKSI STASIUN PENGUMPUL (SP) TANJUNG MIRING BARAT & KARANGAN TIMUR	Doc. No: TMBP-SP001-PS-DST-D101
		PAGE 8 of 8
		Date: 23-Des-2025

DATASHEET FOR DELUGE VALVE

	1. Process Condition						
1	Fluid Handled	:	Foam				
2	Operating Pressure	:	100 psig				
3	Operating Temperature	:	Ambient				
4	Quantity	:	1				
	2. Design Features						
5	Valve Type	:	Diaphragm - Electric Actuation	Flange Rating & Facing	:	VTA	
6	Valve Size	:	2"	Seat Material	:	VTA	
7	Body Material	:	VTA	Spring Material	:	VTA	
8	Trim Material	:	VTA	Diaphragm Material	:	VTA	
9	Flange Size	:	2"				
	3. Valve Operation						
10	Operating Type	:	Electrically Triggered Activated	Control Type	:	Automatic and/or manual	
11	Operating Time	:	Opening Max : 4 sec or VTA				
12		:	Closing Max : 8 sec or VTA				
13	Pressure Drop Across Deluge Valve Assembly	:	Max 10 psi or VTA				
	4. Accessories						
14	Pressure Gauge	:	Yes, Required	Pressure Transmitter	:	N/A	
15	Tubing	:	Yes (as accessories/as required)	Fitting	:	N/A	
16	Automatic Drain Valves	:	Yes	Pressure Alarm Switch	:	Yes	
17	Solenoid Valve		Type	2-Way			
18			Power Supply / Connection	VTA		1/2" NPT	
19			Manual Mechanical Reset	VTA			
20			Protection	VTA			
	5. Others						
21	Painting Color	:	Red (Ral 3000)	Manufacture	:	VTA (as per AMP/PML)	
22	Hydro Test	:	Yes	Model No.	:	VTA	
23	Approval	:	UL Listed or FM Approved				

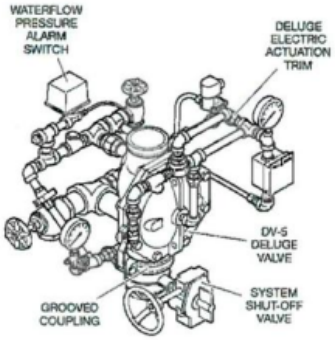

Remarks

VTA : Vendor to Advice

PCG	JASA PEMBANGUNAN FASILITAS PRODUKSI STASIUN PENGUMPUL (SP) TANJUNG MIRING BARAT & KARANGAN TIMUR	Doc. No: TMBP-SP001-PS-DST-D101
		PAGE 9 of 9
		Date: 23-Des-2025

DATASHEET FOR DELUGE VALVE

1. Process Condition

1	Fluid Handled	:	Firewater
2	Operating Pressure	:	100 psig
3	Operating Temperature	:	Ambient
4	Quantity	:	1

2. Design Features

5	Valve Type	:	Diaphragm - Electric Actuation	Flange Rating & Facing	:	VTA
6	Valve Size	:	1.5"	Seat Material	:	VTA
7	Body Material	:	VTA	Spring Material	:	VTA
8	Trim Material	:	VTA	Diaphragm Material	:	VTA
9	Flange Size	:	1.5"			

3. Valve Operation

10	Operating Type	:	Electrically Triggered Activated			Control Type		:	Automatic and/or manual	
11	Operating Time	:	Opening	Max	:	4 sec	or	VTA		
12		:	Closing	Max	:	8 sec	or	VTA		
13	Pressure Drop Across Deluge Valve Assembly	:	Max 10 psi or VTA							

4. Accessories

14	Pressure Gauge	:	Yes, Required		Pressure Transmiter	:	N/A
15	Tubing	:	Yes (as accessories/as required)		Fitting	:	N/A
16	Automatic Drain Valves	:	Yes		Pressure Alarm Switch	:	Yes
17	Solenoid Valve		Type		2-Way		
18			Power Supply	Connection	VTA		1/2" NPT
19			Manual Mechanical Reset		VTA		
20			Protection		VTA		

5. Others

21	Painting Color	:	Red (Ral 3000)	Manufacture	:	VTA (as per AMP/PML)
22	Hydro Test	:	Yes	Model No.	:	VTA
23	Approval	:	UL Listed or FM Approved			

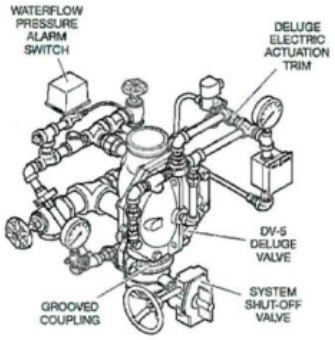

Remarks

VTA : Vendor to Advice